LEGEND

- EXISTING PVC
- EXISTING FIBRE GLASS
- EXISTING FIBREGLASS TO BE REMOVED
- NEW PIPEWORK (PVC or SS)
- BALL VALVE, FLANGED ENDS (SS ≥ 50NB)
- DIAPHRAGM VALVE, FLANGED ENDS
- BALL VALVE (UNION ENDS - PVC, FLANGED SW - SS ≤ 50NB)
- FLANGE
- BUTT WELD
- SOCKET (WELDED - SS, SOLV. WELD - PVC)
- A25 PVC, CLASS 18 (EXIST) OR SCHED 80 (NEW)
- A30 FIBREGLASS
- A7 STAINLESS STEEL

NOTES

1. DIMENSIONS SHOWN ARE APPROXIMATE ONLY. CONFIRM ALL MEASUREMENTS IN THE FIELD PRIOR TO ASSEMBLY.
2. DIMENSIONS SHOWN ARE PIPE CENTRE TO CENTRE OR FLANGE FACE TO FACE.
3. ALL NEW PVC PIPE SHALL BE SCHED 80 PLAIN ENDS. SOLVENT WELD ALL SOCKETED JOINTS.
4. ALL NEW SS PIPE SHALL BE GRADE 304L: SCHED. 40S PLAIN ENDS FOR Ø ≤ 40NB; SCHED 10S BEVELLED ENDS FOR Ø ≥ 50NB. REFER TO TICOR STD PIPING SPEC A7.
5. PIPE SUPPORTS FOR NEW (PVC & SS) PIPE SHALL BE AT MAX. 1m SPACINGS HORIZONTALLY & MAX. 2m SPACINGS VERTICALLY.
6. ALL NEW AND MODIFIED PVC PIPE SHALL BE PAINTED TO TICOR STD "PAINT SPEC. A".

VALVE & FITTING SCHEDULE

ITEM	QTY	ITEM	QTY	ITEM	QTY	ITEM	QTY
2	3	A	1	U	1	AE	1
3	4	H	4	Z	1	E	1
4	4	O	4	AA	4	F	1
16	2	R	5	AB	2		
17	1	S	7	AC	2		
23	2	T	5	AD	2		
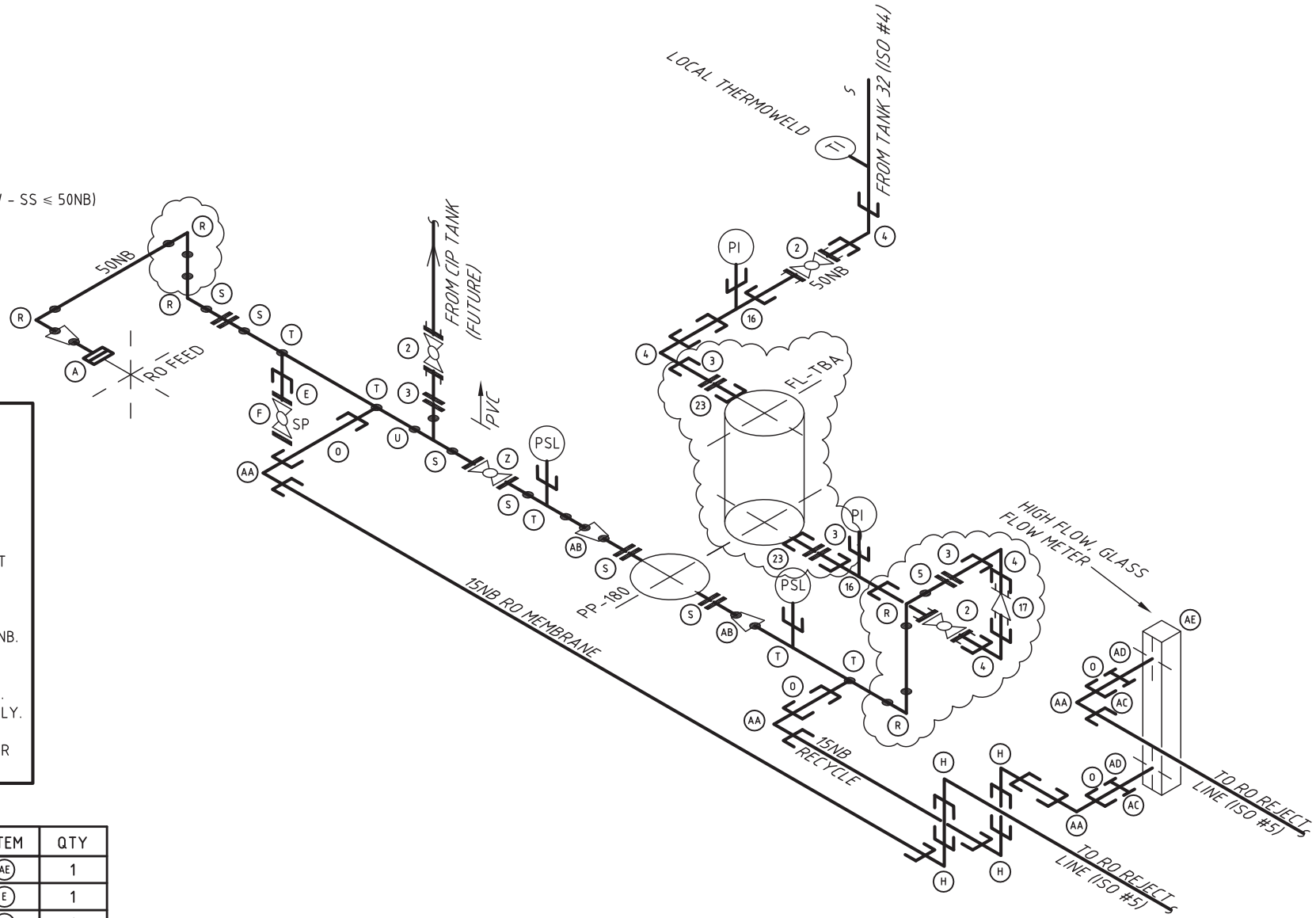
REFER TO ISO#9 FOR FULL VALVE & FITTING SCHEDULE